Electrolux PROFESSIONAL

# Digital Undercounter ecostore HP Premium Refrigerated Counter - 290lt, 2-Door on wheels and with UK plug

ITEM #

MODEL #

NAME #

SIS #

AIA #



**712691 (EHR2BLS)** 2-door Refrigerated Counter 290lt, Saladette with cut-out for GN 1/3 containers, -2+10° C, AISI 304, with wheels - UK plug

## Short Form Specification

**Item No.**

AISI 304 stainless steel panels, AISI 430 bottom panel, galvanized back panel. Worktop thickness 50mm, fitted with cut-out for n. 4 GN 1/3 containers (not included) and stainless steel lid. N. 2 full doors. Built-in refrigeration unit. Operating temperature: -2+10°C. R290 gas in refrigeration circuit. Supplied with 1 grid for each door compartment

## Main Features

- Self closing stainless steel doors (< 90°).
- Internal structure with numerous charging positions available to host grids, ensuring higher net capacity and a greater storage space.
- Preservation performances and temperature uniformity within the cell guaranteed at 5-HEAVY DUTY (40°C) working conditions according to EN16825:2016 test protocol.
- Certified safety CE requirements.
- Frontal and easy access to all components in the cooling unit.
- Fully removable cooling unit to facilitate maintenance.
- Combination of doors and drawers to suit any configuration needed, with the possibility to change the configuration on site. Right cooling unit available on request.
- 0mm clearance installation space: tower configuration cooling unit guarantee performance with frontal ventilation only; this unique solution allows installation against the wall or side by side with other appliances, even on the cooling unit side to maxim
- Raised rear upstand permits unit to be connected up against the wall for better hygiene.
- Anti-tilt runners accept GN 1/1 containers.
- Adjustable temperature range from -2 °C to +10 °C to suit meat, fish and dairy storage requirements.
- Tropicalized unit.

**APPROVAL:**

# Digital Undercounter ecostore HP Premium Refrigerated Counter - 290lt, 2-Door on wheels and with UK plug

## Construction

- Built-in compressor to suit operating conditions.
- Developed and produced in ISO 9001 and ISO 14001 certified factory.
- Fault code display.
- Interior base with rounded corners, pressed from a single sheet.
- Internal and external doors, front and side panels and removable worktop in AISI 304 Stainless steel.
- External back panel in galvanized steel.
- Worktop in AISI 304 Stainless steel with a 50 mm profile.
- Built-in refrigeration unit.
- External bottom panel in stainless steel.
- Anti-drip profile on stainless steel worktop edge.
- 2 compartments with 2 doors.
- If needed, working top can be removed for easier handling during installation (in case of narrow doors).
- Ease of cleaning and high hygiene standards thanks to the rounded internal corners, the easily removable runners, grids and air conveyors.
- Internal structure with 15 charging positions (3 cm pitch) available to host GN 1/1 grids, ensuring higher net capacity and a greater storage space.

## User Interface & Data Management

- Prearranged to fit RS485 port to facilitate connection to a remote computer and integrated HACCP systems.
- Fully compliant HACCP digital control: when temperature exceeds critical limits, acoustic and visual alarms are activated. Up to two months of event are kept in memory.
- Large digital white-digit display with humidity selection button (3 preset level), internal temperature display and setting, manual activation of defrost cycle and turbo frost cycle (to rapidly cool warm loads).
- Connect the product (with accessory) to the OneConnected Platform via Wi Fi or ethernet connection for a seamless remote experience. Real-time monitoring and analytics, alarm management, HACCP data management, APIs, and advanced features keep your fridge fully under control.
- Electrolux Professional Fridge Control APP make the life easier for our customers:
  - Monitor safety of preservation process thanks to HACCP data & alarms for precise control
  - Save time and easy data management having the

## Sustainability

- R290 refrigerant to reduce green house and ozone depletion effects.
- Removable triple-chamber balloon magnetic gasket to improve insulation and reduce energy consumption and ease of cleaning.
- CFC and HCFC free, highly ecological refrigerant type: R290 (ecological gas in foam: cyclopentane). Hydrocarbon refrigerant gas R290 for the lowest environmental impact (GWP=3), to reduce green house and ozone depletion effects.
- Extra insulation: 90mm body insulation to minimize energy dispersion.
- Fitted with 90 mm thickness of cyclopentane insulation for best insulating performance (thermal conductivity: 0,020 W/m*K) and lowest environmental impact (GWP=3).
- Hot gas automatic evaporation of defrost water.

## Included Accessories

| | |
|---|---|
| • 2 of Kit 1/1 grey rilsan grid and 2 side runners for refrigerated counters | PNC 881109 |

## Optional Accessories

| | | |
|---|---|---|
| • 1/1GN grey rilsan grid for refrigerated counters | PNC 881107 | ❑ |
| • 2 side runners for 1/1 GN ecostore refrigerated counters | PNC 881108 | ❑ |
| • Kit 1/1 grey rilsan grid and 2 side runners for refrigerated counters | PNC 881109 | ❑ |
| • 1/1 GN plastic container, H=65 mm | PNC 881110 | ❑ |
| • 1/1 GN plastic container, H=100 mm | PNC 881111 | ❑ |
| • 1/1 GN plastic container, H=150 mm | PNC 881112 | ❑ |
| • Lock for refrigerator/freezer counters with 2 compartments - h700mm (can be used in kit for Marine conversion) | PNC 881242 | ❑ |


The company reserves the right to make modifications to the products without prior notice. All information correct at time of printing.

# Digital Undercounter ecostore HP Premium Refrigerated Counter - 290lt, 2-Door on wheels and with UK plug

Front

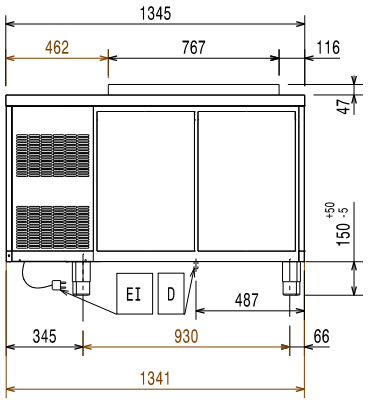


Side

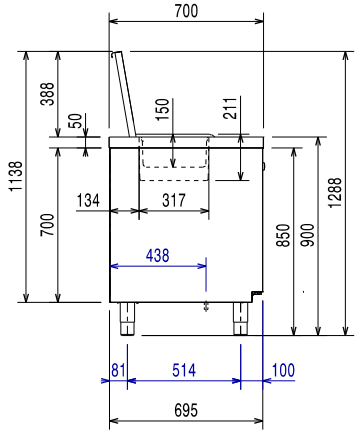


EI = Electrical inlet (power)

Top

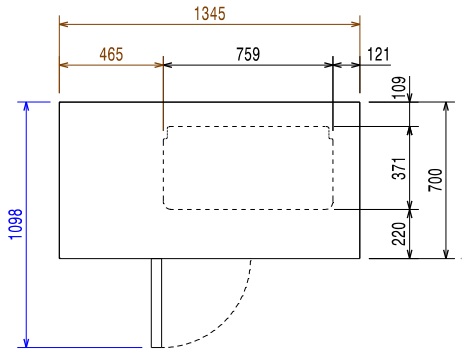


## Electric

| | |
|---|---|
| **Supply voltage:** | 220-240 V/1 ph/50 Hz |
| **Electrical power max.:** | 0.25 kW |
| **Defrost Power:** | 0.29 kW |
| **Plug type:** | UK-13A |

## Key Information:

| | |
|---|---|
| **Net Volume:** | 198 lt |
| **Door hinges:** | |
| **External dimensions, Width:** | 1345 mm |
| **External dimensions, Depth:** | 700 mm |
| **External dimensions, Height:** | 905 mm |
| **Internal Dimensions, Width:** | 798 mm |
| **Internal Dimensions, Depth:** | 560 mm |
| **Internal Dimensions, Height:** | 550 mm |
| **Net weight:** | 112 kg |
| **Shipping volume:** | 1.14 $m^3$ |
| **Depth with doors open:** | 1110 mm |
| **Height adjustment:** | -5/50 mm |
| **Gross capacity:** | |

## Refrigeration Data

| | |
|---|---|
| **Control type:** | Digital |
| **Refrigeration power at evaporation temperature:** | -10 °C |
| **Min/Max internal humidity:** | 40/85 |
| **Operating temperature min.:** | -2 °C |
| **Operating temperature max.:** | 10 °C |
| **Compressor power:** | 1/4 hp |
| **Operating mode:** | Ventilated |
| **Insulation:** | 90 mm (Cyclopentane) |

## ISO Certificates

| | |
|---|---|
| **ISO Standards:** | ISO 9001; ISO 14001; ISO 45001; ISO 50001 |

## Sustainability

| | |
|---|---|
| **Current consumption:** | 1.8 Amps |
| **Refrigerant type:** | R290 |
| **GWP Index:** | 3 |
| **Refrigeration power:** | 320 W |
| **Refrigerant weight:** | 70 g |
| **Energy Class (EU Reg. 2015/1094):** | |
| **Yearly and daily energy consumption (EU Reg. 2015/1094):** | |
| **Climate class (EU Reg. 2015/1094):** | |
| **Energy Efficiency Index-EEI (EU Reg. 2015/1094):** | |


The company reserves the right to make modifications to the products without prior notice. All information correct at time of printing.

2026.11.20